Product Recycling Information
SMART-81 LAMINATOR
September 2024

Product	IDP Corporation
Producer	#601,50,Digital-ro 33-gil,Guro-gu,Seoul,Korea(08377)
Product Description	Model : SMART-81 LAMINATOR
Hazardous Substances and Preparations	This product may contain the following substances:
Batteries	No configurations of this product contain a battery.
Packaging	The packaging materials used for this product do not Contain any of the banned materials listed in the EU Packaging directive The printed user documentation included with this Product is produced on paper with 50% or more Recycled content that has not been bleached with Chlorine. If a Compact Disc(CD) is supplied, it is made from A recyclable polycarbonate material.
Recycling Information	

Product Recycling Information
SMART-81 LAMINATOR
September 2024

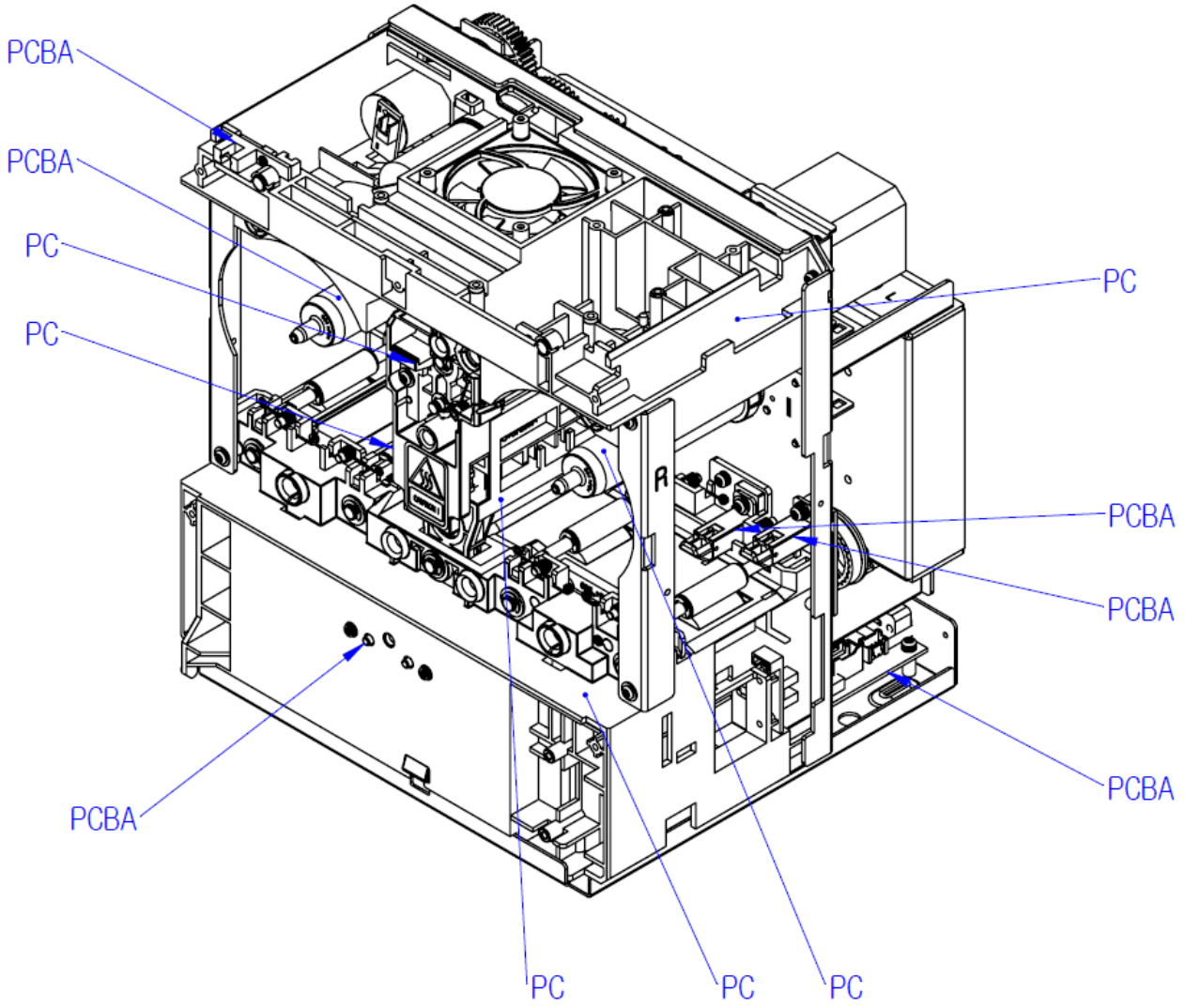

Product Recycling Information
SMART-81 LAMINATOR
September 2024

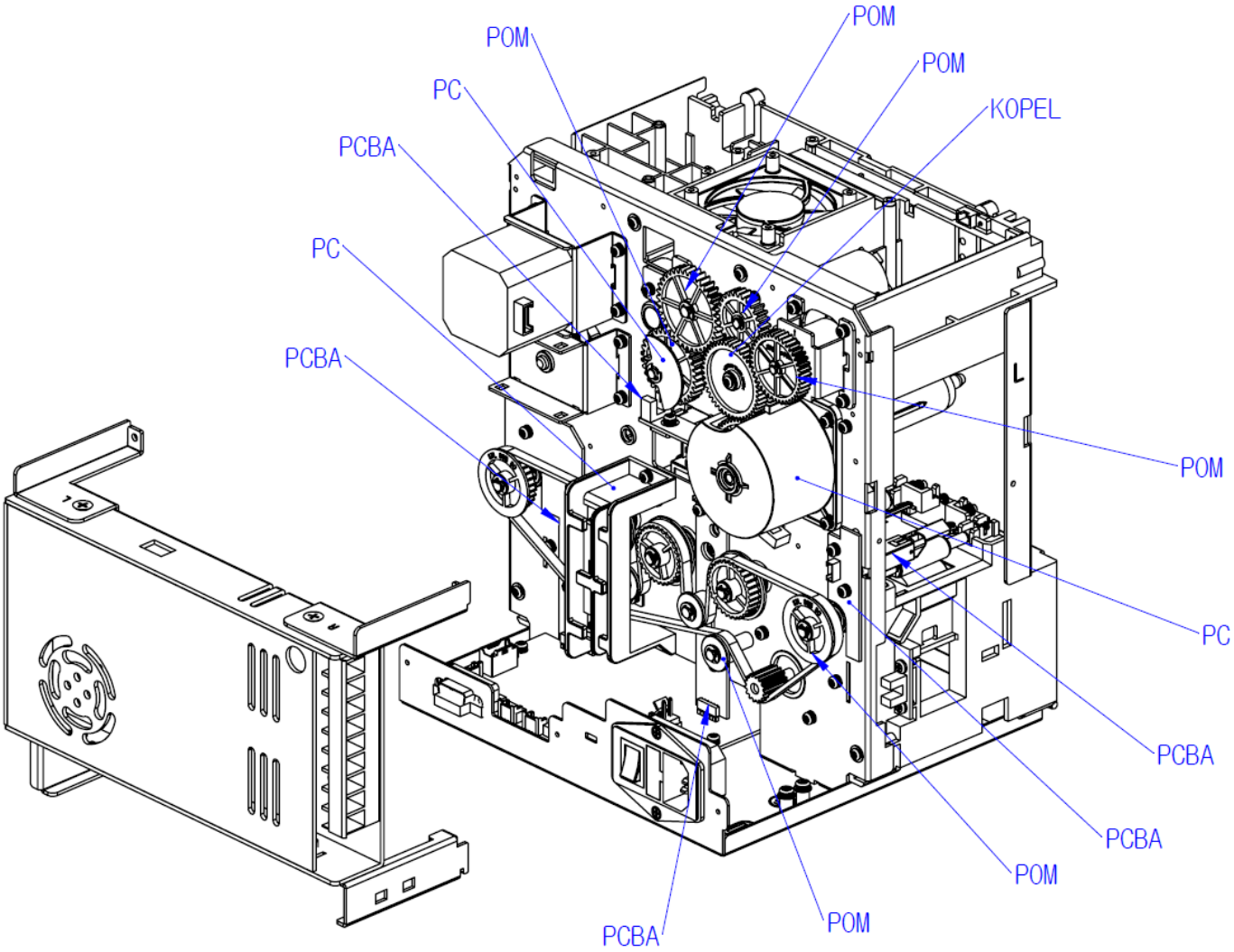

Product Recycling Information
SMART-81 LAMINATOR
September 2024

