Product Recycling Information
SMART-70 Hybrid Flipper
March 2022

Product IDP Corporation

Producer #601,50,Digital-ro 33-gil,Guro-gu,Seoul,Korea(08377)

Product Description Model : SMART-70 Hybrid Flipper

Hazardous Substances and Preparations This product may contain the following substances:

Batteries No configurations of this product contain a battery.

Packaging The packaging materials used for this product do not Contain any of the banned materials listed in the EU Packaging directive

The printed user documentation included with this Product is produced on paper with 50% or more Recycled content that has not been bleached with Chlorine.
If a Compact Disc(CD) is supplied, it is made from A recyclable polycarbonate material.

Recycling Information

Product Recycling Information
SMART-70 Hybrid Flipper
March 2022

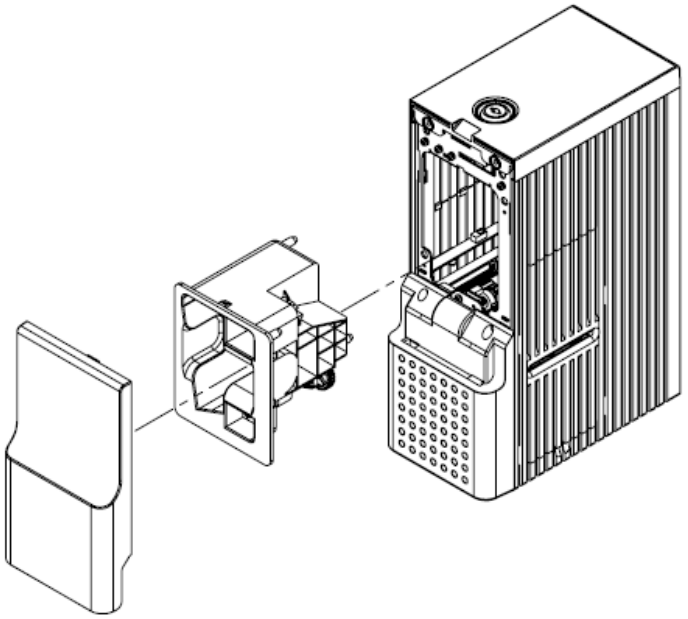

Standard
See pages 3 through 4.

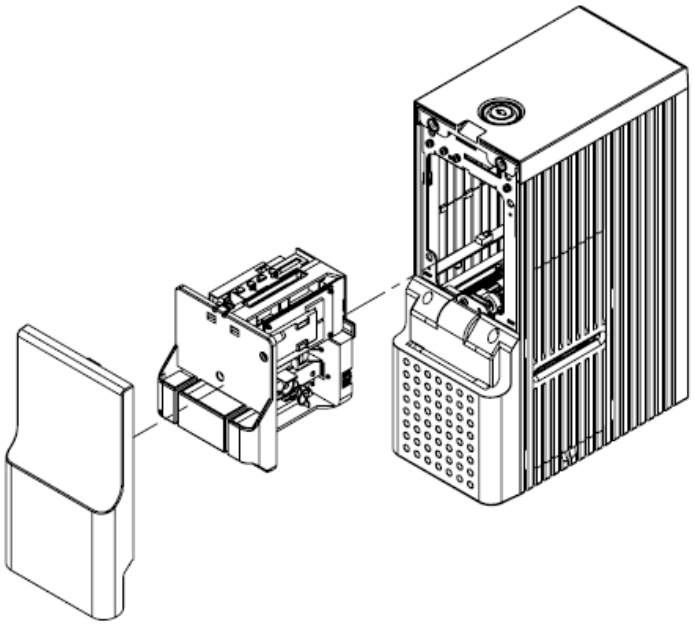

Option (if present)
See page 5.

Product Recycling Information
SMART-70 Hybrid Flipper
March 2022

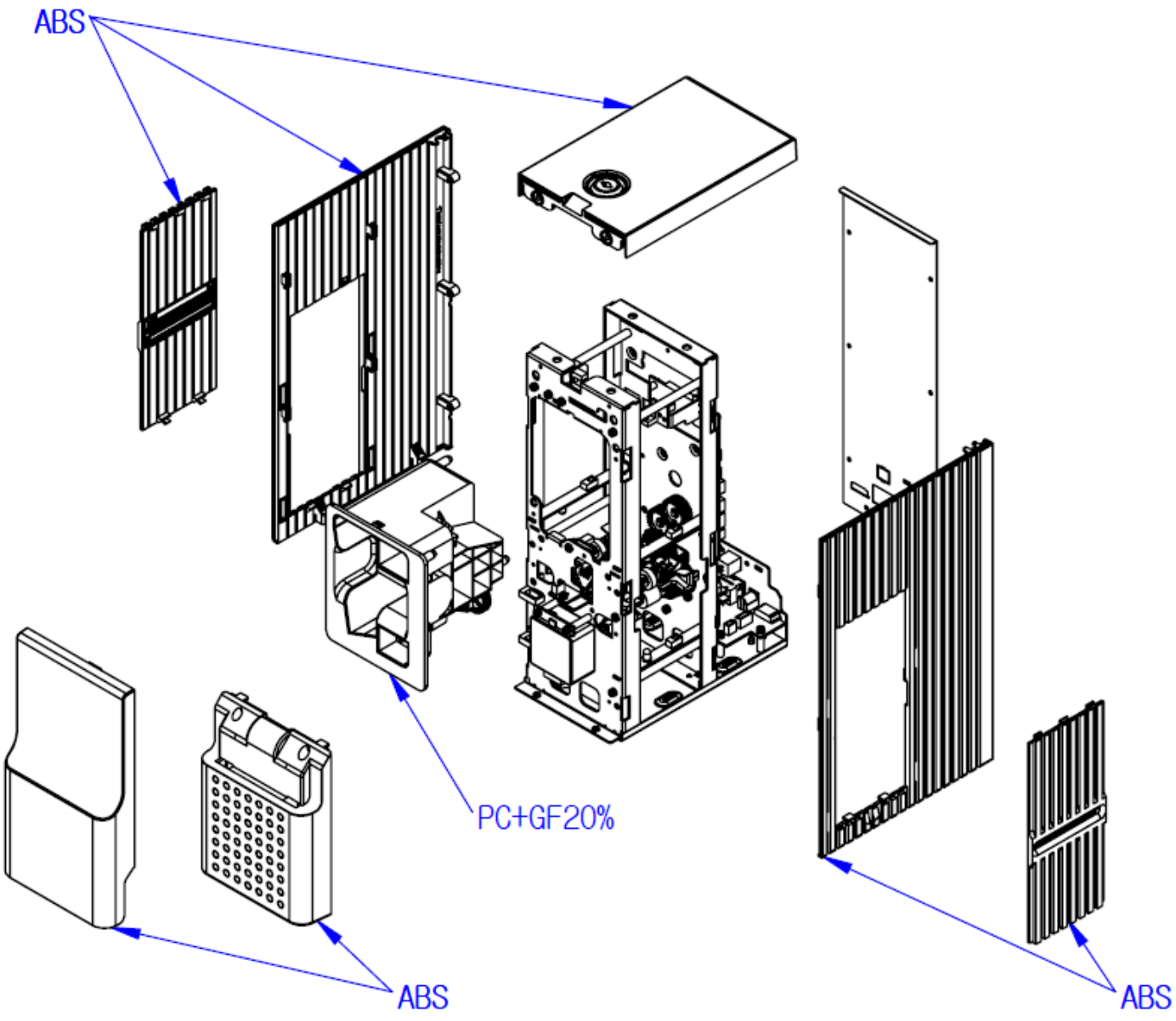

Product Recycling Information
SMART-70 Hybrid Flipper
March 2022

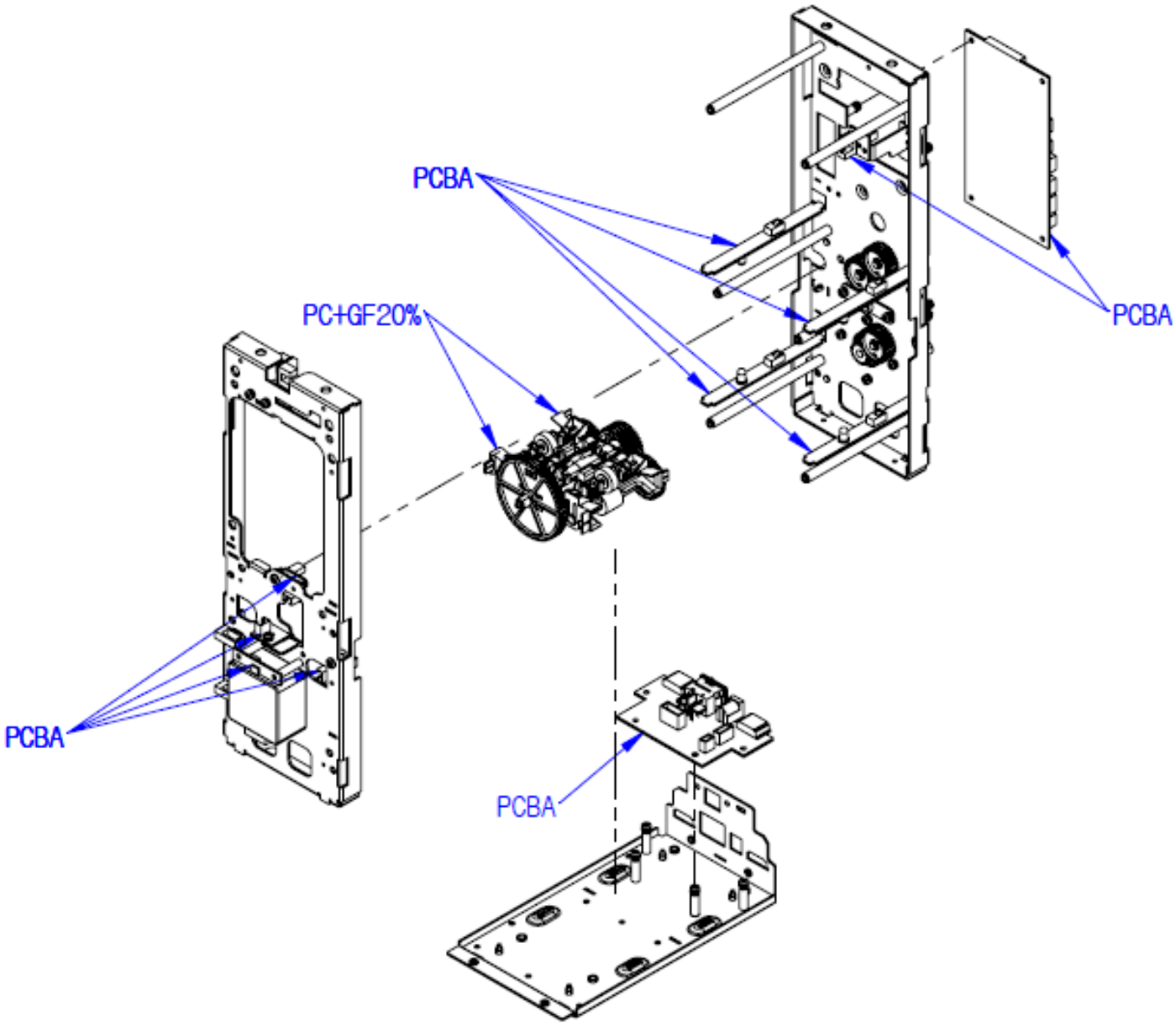

Product Recycling Information
SMART-70 Hybrid Flipper
March 2022

